NEPTUNE

All-Weather Long-Range Gyro Stabilized PTZ Camera

INFINITI

The Neptune PTZ is designed for mobile and marine applications with 2-axis gyro stabilization and various EO/IR payload configurations. Numerous visible zoom lens options up to 272mm, and sensor resolutions available from up to 8MP/4K make the Neptune a high performance day camera. When paired with up to 2000m of ZLID illumination or up to a 305mm HD cooled thermal imaging camera, the Neptune system offers remarkable nighttime surveillance performance as well. All of these sensors are integrated into a rugged IP67 weatherproof housing constructed of strengthened aluminum. The Neptune is built to withstand some of the harshest climates, making it ideal for perimeter security, homeland defense, and coastal protection.

Key Features:

- Long-Range Day/Night PTZ Camera System
- 3MP, 4MP or 8MP High-Resolution CMOS Sensor
- HD Lens with 20X, 30X, 36X or 49X Optical Zoom
- Optical Field of View Options ranging from 75° to 1.51°
- ZLID™ for up to 2km Night Vision in Complete Darkness
- Thermal Imaging for Long-Range Detection up to 35km*
- Optional LWIR Uncooled or MWIR Cooled Thermal
- Designed for Operation in -30°C to +60°C with IP67 Housing
- High Resolution Pan/Tilt with 2-Axis Gyro Stabilization
- Control via RS485/Pelco-D or Octagon Bridge/API Commands
- Optional Integrated Optical Fog Filter

Optional Features:

- GPS & 4G Cellular
- Laser Rangefinder
- Marine Joystick
- Slew-to-Cue via NMEA 0183
- Military Vibration/Shock Mount
- Wide-Angle 4K Spotter Camera

The Neptune's default color is white. Custom colors (such as desert sand pictured here) must be specified at time of order.

6.6mm– 132 20X 8MP

4.7mm– 141 30X 4MP

6mm– 218 36X 4MP

5.6mm– 272 49X 3MP

6mm– 218 36X 8MP

5.6mm– 272 49X 8MP

Multiple Zoom Lens Options up to 272mm

500m ZLID™

1km ZLID™

2km ZLID™

Optional IR Illumination up to 2km

26mm– 75mm LWIR

15mm– 235 MWIR

18mm– 230 MWIR HD

16mm– 305 MWIR HD

Optional Thermal up to 305mm Zoom

IP67

Weatherproof with Military Connectors

OCTAGON ENABLED

Advanced Control

2-Axis Gyro Stabilization

Optional LRF

View the Neptune on our website:

THE NEPTUNE'S

Visible/NIR HD Zoom Camera

INFINITI

VIS/NIR Optical Camera

Infiniti's VIS/NIR zoom cameras utilize high-end CMOS sensors to offer excellent spectral sensitivity in the visible and near-infrared wavelengths of light to provide high-quality images optimized for long-range surveillance. They are designed to provide industry-leading performance and quality, with image resolutions ranging from 2MP (1080p HD) to 8MP (4K UHD).

Neptune shown here with optional vibration mount.

Continuous Zoom Lens Options

The Neptune's precision engineered IR-corrected continuous zoom lens options offer a range of focal lengths from 20X up to 49X optical zoom and integrated rapid autofocus to allow for long-range surveillance of targets without operator intervention or wide angle situational awareness.

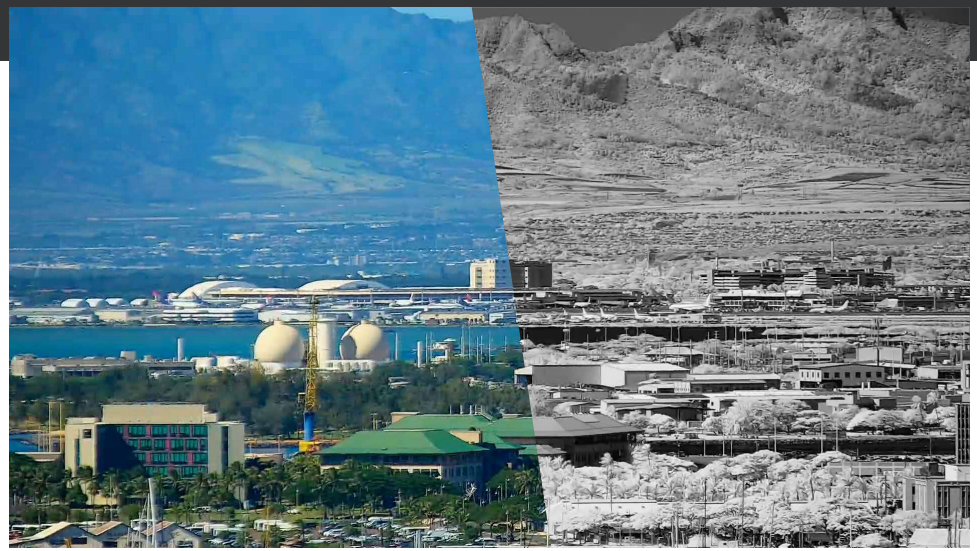

Standard Color Visible Image
(Optical Fog Filter Disabled)

NIR Image
(Optical Fog Filter Enabled)

Optical Fog Filter (NIR Only Mode)

While all of our sensors offer a nighttime NIR+visible mode for optimized sensitivity in low light, the cameras equipped with our NIR bandpass filter (also referred to as a "fog filter") allow users to isolate the NIR (near-infrared) wavelength of light during the day for clearer long-range daytime imaging.

Long-range imaging needs to see through large amounts of atmosphere which often contains particulates like smoke, haze/fog, and other atmospheric distortions. Cutting out the visible wavelength and isolating the NIR can mitigate the effects of smoke, haze and light fog, producing an image with better contrast and less distortion. Our optical fog filter lenses incorporate a motorized filter that is used with the camera's monochrome mode and de-haze image processing to see through smoke, smog and haze; it is available on many of our visible camera modules.

WWW.INFINITIOPTICS.COM **1-866-969-6463** INFO@INFINITIOPTICS.COM

THE NEPTUNE'S

Night Vision Technologies

See in the Dark with ZLID™

IR illumination allows for detailed video when there isn't enough natural light, however common IR LED illuminators have very limited ranges. For long ranges, a laser is needed. Infiniti's ZLID (Zoom Laser IR Diode) technology synchronizes the IR intensity and area illumination with the zoom lens for outstanding active IR performance, eliminating over-exposure, washout, and hot-spots for clear images in complete darkness. The Neptune can also be customized with white light or military grade 940nm "stealth" ZLID illumination that eliminates the red glow typically present with IR illumination, for covert surveillance and reconnaissance.

See Further with Thermal

An optional thermal imager lets you see further than any other night vision technology. Thermal imaging uses heat to see objects, and since humans, animals, and vehicles are hot in contrast to most backgrounds, they become much easier to spot in a scene. Thermal images are also unaffected by bright light and have the ability to see through atmospheric obstructions such as smoke, dust, and light fog. This makes it an ideal technology for many applications, including surveillance and security, search and rescue, fire, marine and land navigation, wide area situational assessment and much more.

12µm VOx Thermal Imager

The Neptune's LWIR sensor options use a cutting-edge 12µm VOx uncooled sensor, giving the camera a narrower field of view without changing the lens. The smaller 12µm pixel pitch achieves a 40% further range than 17µm sensors and over twice the range of older 25µm sensors. The no-maintenance VOx design is self healing and resistant to solar damage.

10µm HD Cooled Thermal

The Neptune's HD cooled thermal options use a 10µm X-Hot HD cooled thermal imager with a 18–230mm or 16–305mm zoom lens. The smaller 10µm pixel pitch boasts 50% further range than 15µm sensors, making the 305mm lens equivalent to a 455mm lens with detection distances of up to 35km*.

Human DRI:

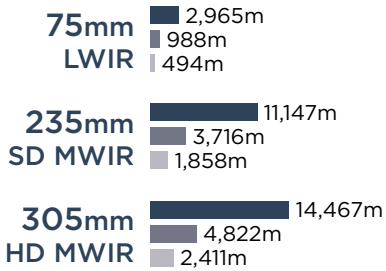

Vehicle DRI:

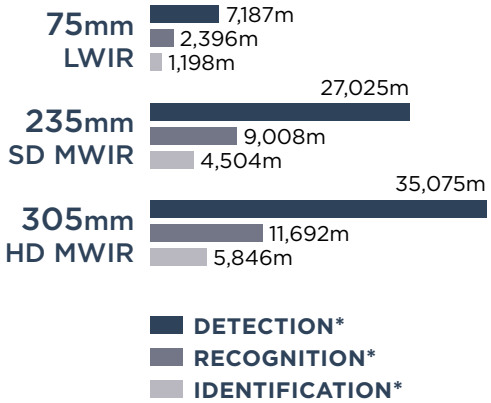

*DRI detection ratings are based on industry-wide standards (Johnson's Criteria) that can be misleading if not properly understood.
For more information, please see our whitepaper about understanding DRI measurements at: www.infinitioptics.com/dri

WWW.INFINITIOPTICS.COM 1-866-969-6463 INFO@INFINITIOPTICS.COM

NEPTUNE

Visible Camera Options

INFINITI ELECTRO-OPTICS

		8M-49X	8M-36X	3M-49X	4M-36X
Simulated FOV @ 1km					
Pixels Per Meter @ 1km		136ppm	109ppm	78ppm	75ppm
DORI	D: 25ppm	5,440m Detection	4,360m Detection	3,103m Detection	2,982m Detection
	O: 62ppm	2,194m Observation	1,758m Observation	1,251m Observation	1,202m Observation
	R: 125ppm	1,088m Recognition	872m Recognition	621m Recognition	596m Recognition
	I: 250ppm	544m Identification	436m Identification	310m Identification	298m Identification
Output Resolution		4K @ 30fps (3840×2160)	8MP/4K @ 30fps (3840×2160)	3MP @ 55fps (2048×1536)	4MP @ 60fps (2688×1520)
Image Sensor		8.4 Megapixel 1/1.8" W CMOS	8.4 Megapixel 1/1.8" W CMOS	3.2 Megapixel 1/1.8" CMOS w/GS††	4.5 Megapixel 1/1.7" W CMOS
Lens*	Focal Length	5.6–272mm	6–218mm	5.6–272mm	6–218mm
	Optical Zoom	49X Optical Zoom + 16X Digital	36X Optical Zoom + 16X Digital	49X Optical Zoom + 16X Digital	36X Optical Zoom + 16X Digital
	Angle of View	75°–1.62° Horizontal	65.2°–2° Horizontal	71.4°–1.51° Horizontal	66.4°–2.1° Horizontal
	Focus	Auto / Manual	Auto/Manual	Auto/Manual	Auto/Manual
Minimum Illumination		Color: 0.05 Lux, B&W: 0.005 Lux @ ƒ/1.4	Color: 0.1 Lux; B&W: 0.01 Lux @ ƒ/1.5	Color: 0.005 Lux, B&W: 0.001 Lux @ ƒ/1.4	Color: 0.005 Lux, B&W: 0.0005 Lux @ ƒ/1.5
Optical Fog Filter (NIR)		Yes	Yes	Yes	Yes
Heatwave Mitigation		No	No	No	No
NDAA Compliant		Yes	Yes	No	Yes
Video Network	Compression	H.265/H.264/MJPEG			
	Protocol	ONVIF, HTTP, RTSP, RTP, TCP, UDP			
Image Stabilization		Electronic Image Stabilization (EIS)			
Image Enhancements		Auto White Balance, WDR, 2D/3D DNR, BLC, HLC, Digital Defog			
Edge Storage		Supports MicroSD Card up to 256GB			

*Lens measurements and angle of view are accurate to ±10% due to back focus distances, sensor sizes, lens manufacturing, etc. ††Global shutter.

ZLID™ Illumination Options

	180m ZIR	180m ZWL	500m ZLID		750m ZLID		1000m ZLID		1500m ZLID		2000m ZLID	
Illumination Distance	180m	180m	500m		750m		1000m		1500m		2000m	
Wavelength	808nm	White Light	850nm	940nm	808nm	940nm	808nm	940nm	808nm	940nm	808nm	940nm
NOHD	0m (eye safe at any distance)		8.5m	6.9m	13m	9.6m	50m	36.6m	56.4m	45.2m	69m	51m

WWW.INFINITIOPTICS.COM 1-866-969-6463 INFO@INFINITIOPTICS.COM

NEPTUNE

Thermal Camera Options

INFINITI ELECTRO-OPTICS

Uncooled Thermal Camera Options

		35mm Fixed			50mm Fixed			75mm Fixed			100mm Fixed			120mm Fixed			26–75mm Zoom		
Image Sensor		Uncooled Vanadium Oxide (VOx) Microbolometer, 30Hz or 9Hz upon request																	
Resolution		640×512 pixels (384×288 or 1280×1024 pixels optional)																	
Pixel Pitch		12µm (Over twice the range of 25µm sensors, 40% further range than 17µm sensors)																	
Lens		35mm ƒ/1.0			50mm ƒ/1.0			75mm ƒ/1.2 or ƒ/1.0			100mm ƒ/1.0			120mm ƒ/1.4			26–75mm ƒ/1.0		
Focus		Athermalized			Athermalized			Motorized Focus			Motorized or Athermal			Motorized Focus			Motorized Autofocus		
Field of View	640×512	12.5° Horizontal FOV			8.8° Horizontal FOV			5.9° Horizontal FOV			4.4° Horizontal FOV			3.7° Horizontal FOV			16.8°–5.9° Horizontal FOV		
	1280×1024†	24.8° Horizontal FOV†			17.5° Horizontal FOV†			11.7° Horizontal FOV†			8.8° Horizontal FOV†			7.32° Horizontal FOV†			32.9–11.7° Horizontal FOV		
Human DRI Ratings*		1.3 km	461 m	231 m	1.9 km	659 m	329 m	2.9 km	988 m	494 m	3.9 km	1.3 km	659 m	4.7 km	1.5 km	791 m	2.9 km	988 m	494 m
Vehicle DRI Ratings*		3.3 km	1.1 km	559 m	4.8 km	1.6 km	799 m	7.1 km	2.4 km	1.2 km	9.5 km	3.2 km	1.6 km	11.5 km	3.8 km	1.9 km	7.1 km	2.4 km	1.2 km
Image Optimizations		DICE (Dynamic Image Contrast Enhancement), BPR, NUC, & AGC user configurable via SDK, GUI																	
Digital Zoom		2X & 4X dynamic zoom/pan with range switching																	
Spectral Range		8,000–14,000nm (LWIR)																	
Thermal Sensitivity		20–35mK																	
Cooler Lifetime		No Cooler (maintenance free)																	
Image Display Modes		White Hot, other color palettes available upon request																	

Cooled Thermal Camera Options

	15–120mm (-120CTZ)			25–180mm (-180CTZ)			15–235mm (-235CTZ)			18–230mm (-230CTZ-HD)			16–305mm (-305CTZ-HD)		
Image Sensor	High Sensitivity Cooled X-Hot Detector, 30Hz									High Sensitivity Cooled InSb or X-Hot Detector, 30Hz					
Resolution	640×480 or 640×512 pixels									1280×1024 pixels					
Pixel Pitch	10µm (50% further range than 15µm sensors)														
Lens	15–120mm ƒ/3.6 Motorized Zoom			25–180mm ƒ/3.6 Motorized Zoom			15–235mm ƒ/3.6 Motorized Zoom			18–230mm ƒ/4.0 Motorized Zoom			16–305mm ƒ/4.0 Motorized Zoom		
Focus	Motorized Autofocus			Motorized Autofocus			Motorized Autofocus			Motorized Autofocus			Motorized Autofocus		
Field of View	24.1–3.06° Horizontal FOV			14.6–2.04° Horizontal FOV			24.1–1.56° Horizontal FOV			39.1–3.19° Horizontal FOV			43.6–2.4° Horizontal FOV		
Pixels Per Meter @ 1km	12ppm			18ppm			23.5ppm			23ppm			30ppm		
Human DRI Ratings*	5.7 km	1.9 km	949 m	8.5 km	2.8 km	1.4 km	11.1 km	3.7 km	1.8 km	10.9 km	3.6 km	1.8 km	14.4 km	4.8 km	2.4 km
Vehicle DRI Ratings*	13.8 km	4.6 km	2.3 km	20.7 km	6.9 km	3.4 km	27.0 km	9.0 km	4.5 km	26.4 km	8.8 km	4.4 km	35.0 km	11.7 km	5.8 km
Special Features	Dynamic Image Contrast Enhancement (DICE)									DICE, Thermally Compensated Optics (TCO)					
Digital Zoom	4X Digital Zoom (16X optional)														
Spectral Range	3,000–5,000nm (MWIR)														
Thermal Sensitivity	20–25mK														
Cooler Lifetime (@23°C)	20,000 Hour Rated MTBF (InSb) / 30,000 Hour Rated MTBF (X-Hot)														

* D R I While DRI ratings are based on the industry-standard Johnson's Criteria, they represent theoretical maximums under ideal conditions that typically exceed real-world performance. Additionally, a "Detection" rating means that a target will appear only as a tiny speck of pixels, rather than as a clearly defined or recognizable object. For more info, please see our whitepaper about understanding DRI at: www.infinitioptics.com/dri

Focal lengths and FOVs are within ±5%.

†HD sensor option coming soon.

WWW.INFINITIOPTICS.COM **1-866-969-6463** INFO@INFINITIOPTICS.COM

NEPTUNE

Additional Specifications

INFINITI ELECTRO-OPTICS

Optional LRF	LRF4	LRF7	LRF20	LRF21	LRF25	LRF30
Extended Range	4.2km	7.1km	20km	21km	25km	30km
Range to NATO Vehicle*	3.5km	6km	8km	10km	12km	18km
Range to Human*	2km	3.8km	4km	5km	6km	9km
Wavelength	1530nm (±5)					
Precision**	0.1–1.5m		0.2–2.5m			
Lifetime MTBF†	At least 1500 hours		At least 1 million single measurements			

Some options may not be available depending on configuration. *Range performance is dependent on distance and target reflectivity. Calculated using NATO Vehicle size of 2.3×2.3m, Human size of 0.5×1.8m, with target visibility 25km, maximum measuring time, target reflectivity 30%, detection probability 90%. Depending on received signal level. Up to three (3) targets. See our LRF brochure for more information **LRF accuracy is based on ideal conditions. See our LRF brochure for more information. †Based on assumptions.

Pan/Tilt Mechanical	
Pan Angle & Speed	Endless 360° Continuous Rotation, 0.1°/s to 97°/s, 0.01° minimum increment
Tilt Angle & Speed	-30° to +90°, 0.1°/s to 80°/s, 0.01° minimum increment
Proportional Pan/Tilt	Auto adjusts pan/tilt speed based on zoom level
Gyro Stabilization	2-axis, <0.2° RMS
Octagon Enabled	Infiniti's Octagon platform provides a unified API for integration with third party C2/VMS softwares, radar slew-to-cue, and our network-based PTZ control accessories.
Physical	
Construction	High Strength Aluminum Alloy
Weight	17–23 kg (37–51 lbs), depending on configuration
Wiper	Optional (must be specified in initial order)
Environmental	
Operational Temperature	-30°C to +60°C, <90% Relative Humidity
Environmental	IP67 Weatherproof Housing
Electrical	
Input Voltage	48VDC (24VDC optional)
Power Consumption	< 135W (will change depending on configuration)

Brochure specifications subject to change due to global supply chain constraints and material availability.

WWW.INFINITIOPTICS.COM **1-866-969-6463** INFO@INFINITIOPTICS.COM

NEPTUNE

Dimensions

INFINITI ELECTRO-OPTICS

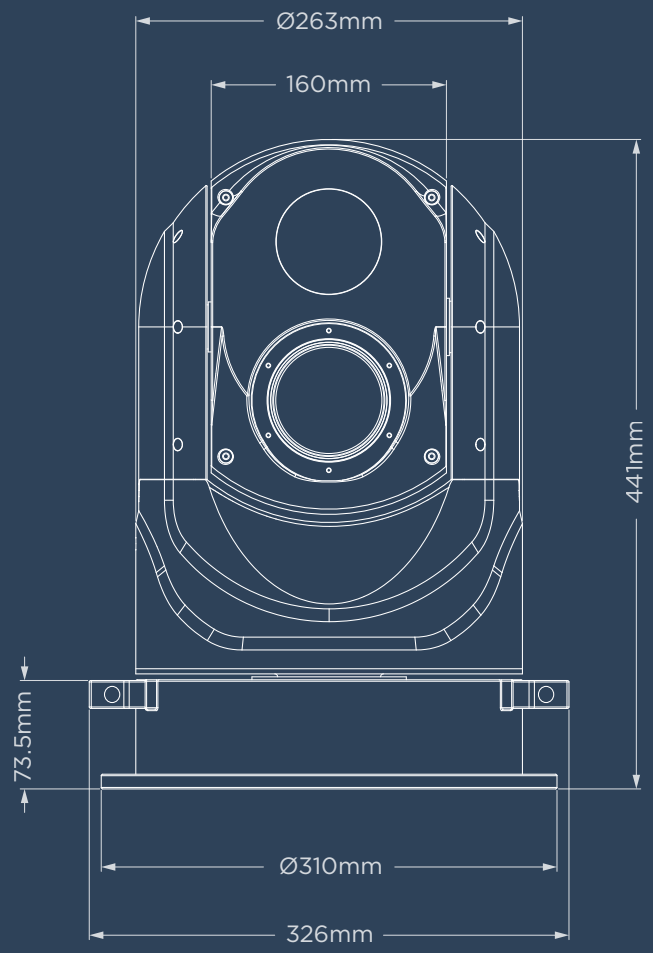

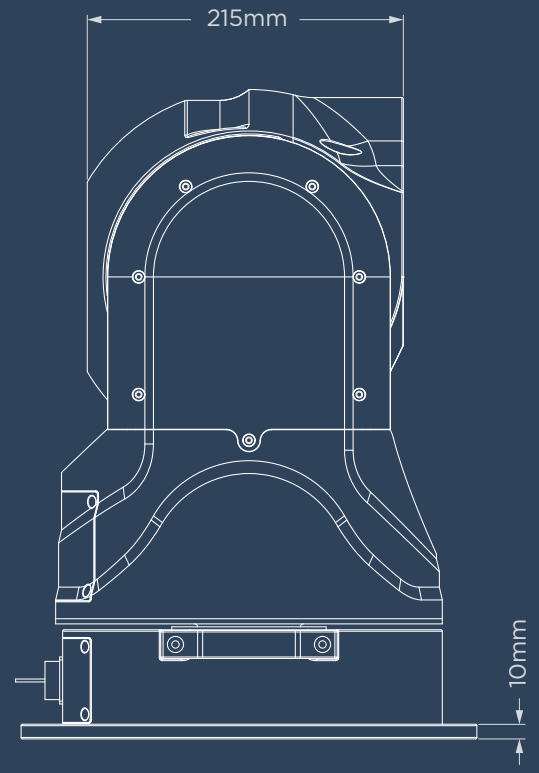

WWW.INFINITIOPTICS.COM **1-866-969-6463** INFO@INFINITIOPTICS.COM

NEPTUNE

Additional Images

INFINITI ELECTRO-OPTICS

Examples of Neptune orders with custom RAL paint color and optional wiper (both must be specified at time of order).

WWW.INFINITIOPTICS.COM **1-866-969-6463** INFO@INFINITIOPTICS.COM

Version 4.05.261009